- **Port size: 1/4“ ... 3/4“ (ISO G/PTF)**
- **Olympian relief valves protect compressed air systems from over-pressurisation**
- **High relief capacity, sensitive and accurate**
- **Threaded relief port for silencer or piped exhaust**
- **Norgren pressure relief valves comply with category O(S.E.P.) and category 1 of the Pressure Equipment Directive 97/23/EC**

Technical features

Medium:
Compressed air only
Operating pressure:
17 bar (246 psi) maximum
Outlet pressure adjustment range:
(standard)
1 ... 10 bar (14 ... 145 psi)
(optional)
0,4 ... 4 bar (5 ... 58 psi),
2 ... 16 bar (29 ... 232 psi)

Port sizes:
1/4”, 3/8”, 1/2” or 3/4”
Gauge port:
1/8 PTF with PTF main ports
Rc1/8 with ISO G main ports
Relief port:
1/2 PTF with PTF main ports
G1/2 with ISO G main ports

Ambient/Media temperature:
-20° ... +80°C (-4° ... +176°F)
Version with gauge:
-20° ... +65°C (-4° ... +149°F)
Air supply must be dry enough to avoid ice formation at temperatures below +2°C (+35°F).

Materials:
Body, bonnet & yoke: Zinc alloy
Connection piece: Aluminium
Bottom plug: Aluminium
Adjusting screw: Steel
Elastomers: NBR

Technical data, standard models

Symbol	Port size	Size	Outlet pressure adjustment range (bar)	Weight (kg)	Model
	G1/4	—	1...10	1,68	V64H-2GD-RMN
	G3/8	—	1...10	1,66	V64H-3GD-RMN
	G1/2	Basic	1...10	1,63	V64H-4GD-RMN
	G3/4	—	1...10	1,99	V64H-6GD-RMN
	Without yoke		1...10	1,20	V64H-NND-RMN

Option selector

V64H-★★D-R★★

Port size	Substitute
1/4”	2
3/8”	3
1/2”	4
3/4”	6
Without yoke	N
Thread	**Substitute**
PTF	A
ISO G (standard)	G
Without yoke (standard)	N

Gauge	Substitute
With	G
Without (standard)	N
Spring (Outlet Pressure Range) *1)	**Substitute**
1 ...10 bar (standard)	M
0,3 ... 4 bar	F
2 ... 16 bar	S

*1) Relief valves can be adjusted to pressures in excess of, and less than, those specified. Do not use these units to control pressures outside of the specified ranges.

Relief characteristics

Spring version: 10 bar, port size: 1/2”

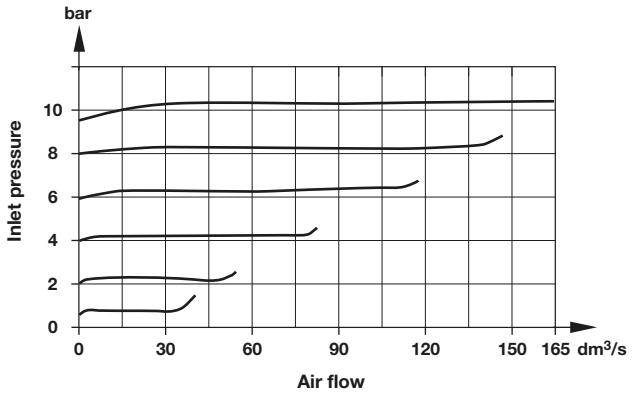

Accessories

Thread	Models with G-thread Single yoke	Double yoke	3/2 Shut-off valve Threaded inlet only	Threaded outlet only	End connector kit	Rear entry bracket kit
		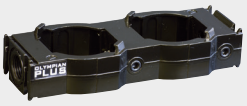				
G1/4	Y64A-2GA-N1N	Y64A-2GA-N2N	T64T-2GB-P1N	T64T-2GC-P1N	—	—
G3/8	Y64A-3GA-N1N	Y64A-3GA-N2N	T64T-3GB-P1N	T64T-3GC-P1N	—	—
G1/2	Y64A-4GA-N1N	Y64A-4GA-N2N	T64T-4GB-P1N	T64T-4GC-P1N	74505-50	—
G3/4	Y64A-6GA-N1N*	Y64A-6GA-N2N*	T64T-6GB-P1N	T64T-6GC-P1N	74505-53	18-026-981
1/4 PTF	Y64A-2AA-N1N	Y64A-2AA-N2N	T64T-2AB-P1N	T64T-2AC-P1N	—	—
3/8 PTF	Y64A-3AA-N1N	Y64A-3AA-N2N	T64T-3AB-P1N	T64T-3AC-P1N	—	—
1/2 PTF	Y64A-4AA-N1N	Y64A-4AA-N2N	T64T-4AB-P1N	T64T-4AC-P1N	74505-52	—
3/4 PTF	Y64A-6AA-N1N*	Y64A-6AA-N2N*	T64T-6AB-P1N	T64T-6AC-P1N	74505-55	—

*These yokes are supplied with two end connenctor kits as standard.

Bracket mounting	Nut	Tamper resistant kit	Yoke connector kit	Porting block	Adjustable pressure switch	Padlock with two keys
						
74504-50	74502-89	1581-90	74503-51	74507-50	4346-99	0613633 (brass)

Service kit

Service kit
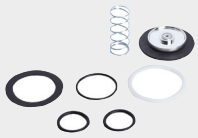
V64H-KIT

Gauges

Center back connection, white face (full technical specification see datasheet 8.900.900)

6

Pressure range bar *1	MPa	psi	Ø	Thread size	Model
0 ... 4	0 ... 0,4	0 ... 58	50 mm	R1/8	18-013-011
0 ... 10	0 ... 1	0 ... 145	50 mm	R1/8	18-013-013
0 ... 25	0 ... 2,5	0 ... 362	50 mm	R1/8	18-013-014

*1) primary scale

Center back connection, black face for North America (full technical specification see datasheet 8.900.900)

6

Pressure range psig *1	bar	MPa	Ø	Thread size	Model
0 ... 60	0 ... 4	0 ... 0.4	2" (50 mm)	1/8 NPT	18-013-202
0 ... 160	0 ... 11	0 ... 1.1	2" (50 mm)	1/8 NPT	18-013-204
0 ... 400	0 ... 28	0 ... 2.8	2" (50 mm)	1/8 NPT	18-013-206

*1) primary scale

Basic dimensions

Dimensions in mm
Projection/First angle

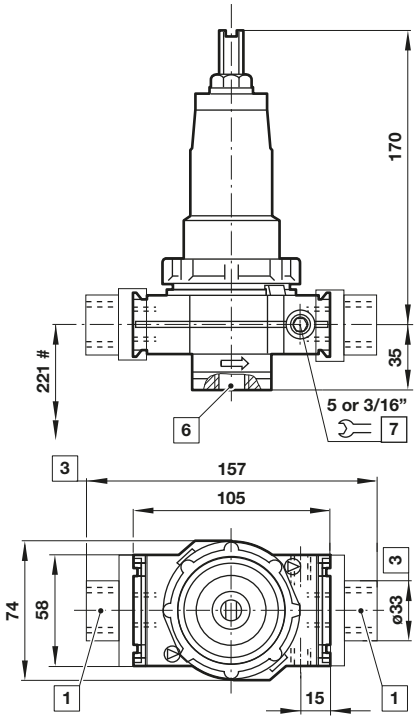

Minimum clearance required to remove unit from yoke
1 Main ports 1/4", 3/8", 1/2" or 3/4"
3 For main ports 3/4" only
6 Relief port 1/2"
7 Gauge port 1/8"

Single yoke with bracket mounting

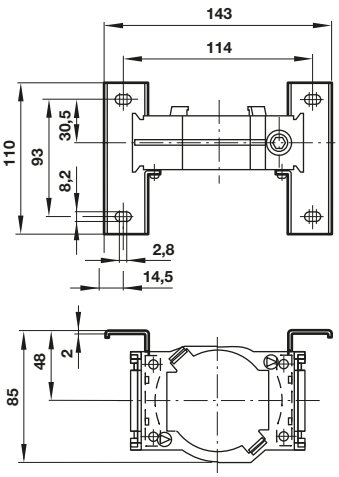

Double yoke with bracket mounting

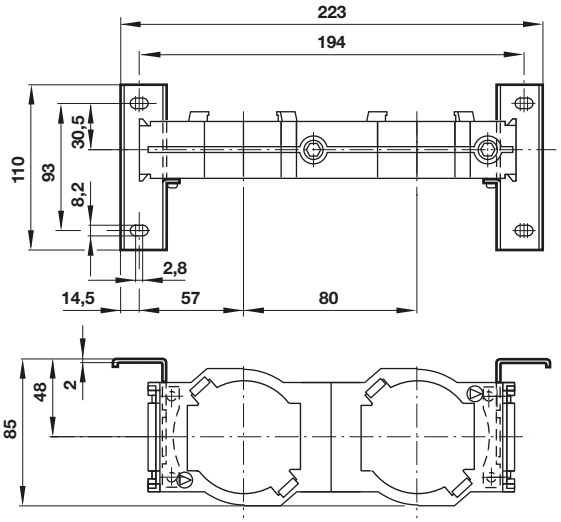

Rear entry bracket
18-026-981

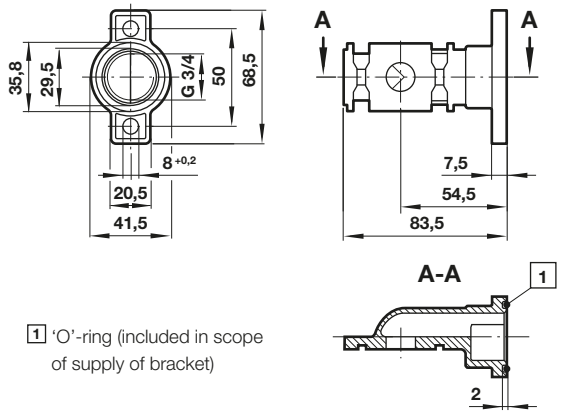

1 'O'-ring (included in scope of supply of bracket)

Porting block
74507-50

Dimensions in mm
Projection/First angle

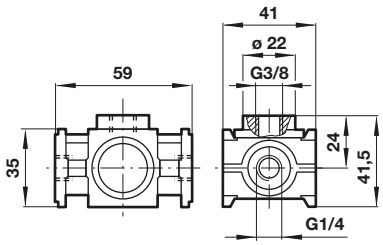

Adjustable pressure switch
4346-99

Voltage	24 V d.c./240 V a.c.
Current	0,5 A (d.c.); 5 A (a.c.)
Pressure range	2 ... 10 bar
Repeatabillity	2% of full set point range at 20°C
Average deadband	0,8 ... 1,7 bar
Electrical connection (corresponding to choosen coil)	EN 175301-803 - Form C, 15 mm
Degee of protection:	IP65
Adjustable	Standard
Material	Body: Aluminium, Elastomers: NBR

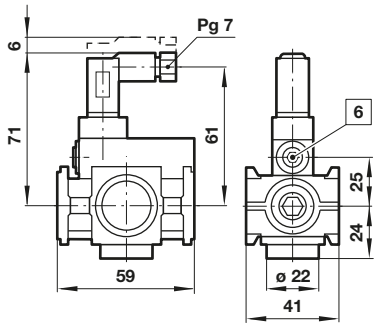

6 Adjusting screw

3/2 Shut-off valve

Symbol	A	B	ø C	Model
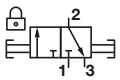	G1/4	48	27	T64T-2G*-P1N
	G3/8	48	27	T64T-3G*-P1N
	G1/2	48	27	T64T-4G*-P1N
	G3/4	51	33	T64T-6G*-P1N

* B = Threaded inlet only, C = Threaded outlet only

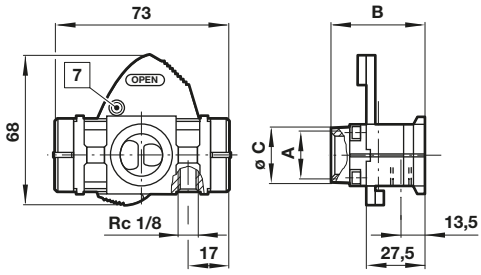

7 Padlock hole 7,5 mm

Warning

These products are intended for use in industrial compressed air systems only. Do not use these products where pressures and temperatures can exceed those listed under **»Technical features/data«**.
Before using these products with fluids other than those specified, for non-industrial applications, life-support systems or other applications not within published specifications, consult IMI Precision Engineering, Norgren GmbH.
Through misuse, age, or malfunction, components used in fluid power systems can fail in various modes.

The system designer is warned to consider the failure modes of all component parts used in fluid power systems and to provide adequate safeguards to prevent personal injury or damage to equipment in the event of such failure.
System designers must provide a warning to end users in the system instructional manual if protection against a failure mode cannot be adequately provided.
System designers and end users are cautioned to review specific warnings found in instruction sheets packed and shipped with these products.